H938

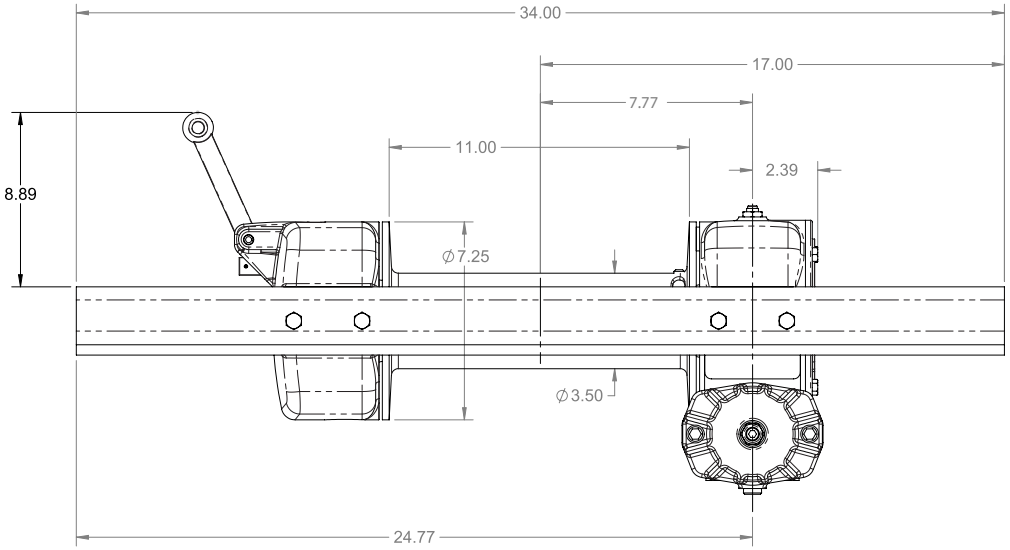

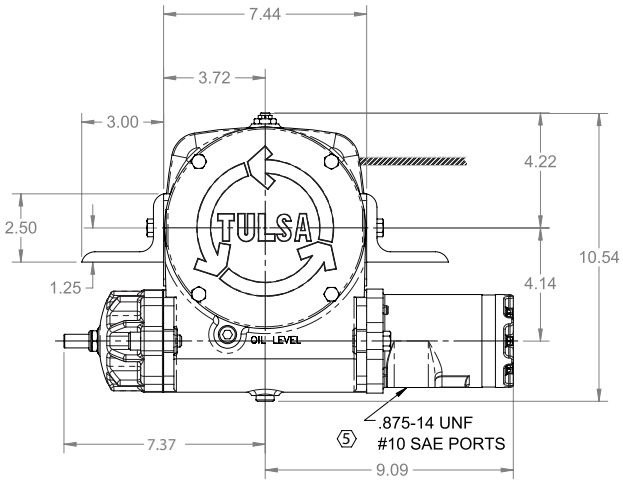

PERFORMANCE DATA

INPUT SPEED (MAX)	800 RPM
INPUT TORQUE (MAX)	877 IN-LBS
DYNAMIC EFFICIENCY	53%
CABLE DIAMETER	.437 IN.
GEAR BOX RATIO	38:1

LAYER	LINE PULL POUNDS	LINE SPEED FT/MIN	TOTAL CABLE FEET
1	9,000	21.7	23
2	7,364	26.5	52
3	6,231	31.4	85

PART #: 80699