TH1200-41

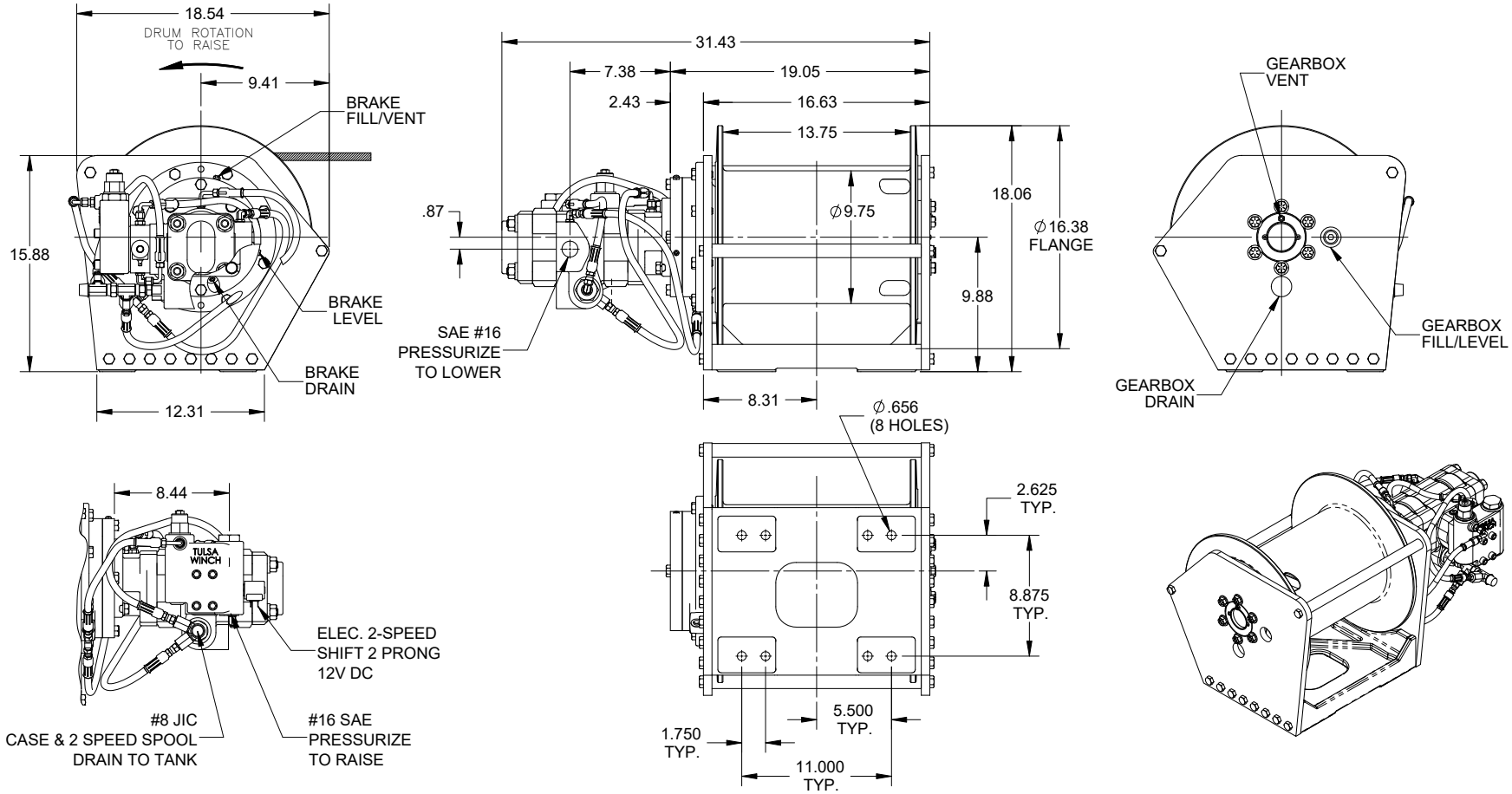

WINCH PERFORMANCE SPECIFICATIONS

2,575 PSI — Ø.563 CABLE

GEAR RATIO 41:1	WINCH PERFORMANCE AT LOW SPEED 60 GPM 4.92 CID		WINCH PERFORMANCE AT HIGH SPEED 60 GPM 2.46 CID		TOTAL DRUM CAPACITY (FT)
LAYER	STALL LINE PULL (LBS)	WINCH SPEED (FPM)	STALL LINE PULL (LBS)	WINCH SPEED (FPM)	Ø.563 CABLE
FIRST	12,000	144	6,000	288	65
SECOND	10,819	160	5,409	319	137
THIRD	9,849	175	4,924	350	216
FOURTH	9,039	191	4,519	382	302
FIFTH	8,352	207	4,176	413	395

1. UNIT PRIMED WITH GRAY PRIMER.
2. GEARBOX FILLED WITH 1.50 QTS. EP-90 OIL.
3. BRAKE FILLED WITH .25 QTS. LIGHTWEIGHT NON-EP OIL.
4. UNIT WILL ACCEPT DL2.
5. BRAKE FULL OFF AT 225 PSI ±10%.

PART #: 8306001